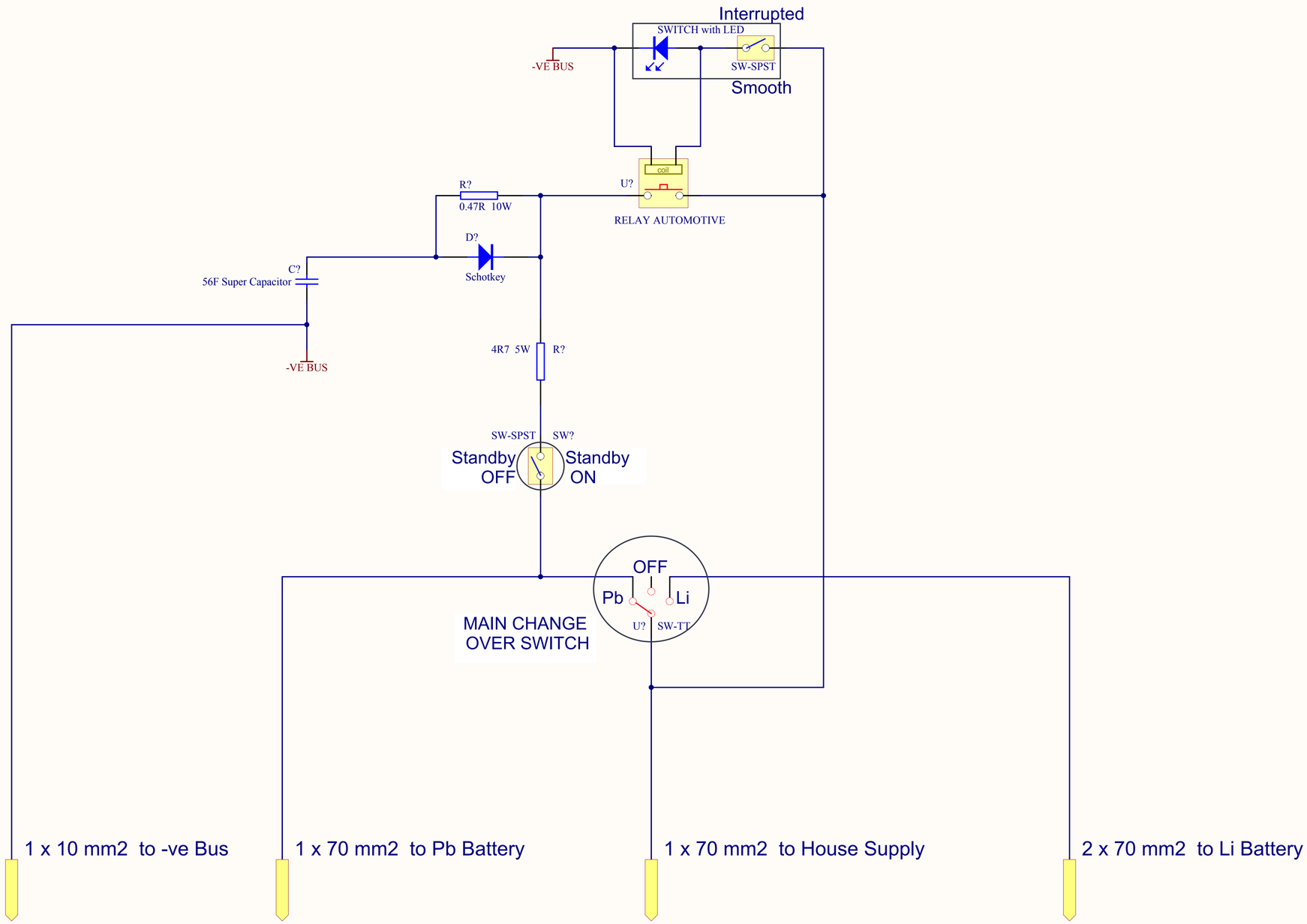

MODIFICATIONS

TURO TECHNOLOGY PTY LTD			
DRN AP	TITLE RUSALKA Lithium Installation Pb - Li Switch	DRG No	
CKD			
APPD			
DATE 5/4/2017		SHEET OF	